**BODY, DECALS - Z26S4D92AH/BH (901736)**

**2026 RZR - RZR PRO S4 ULTIMATE (R01) - Z26S4D92AN/AH/BN/BH**

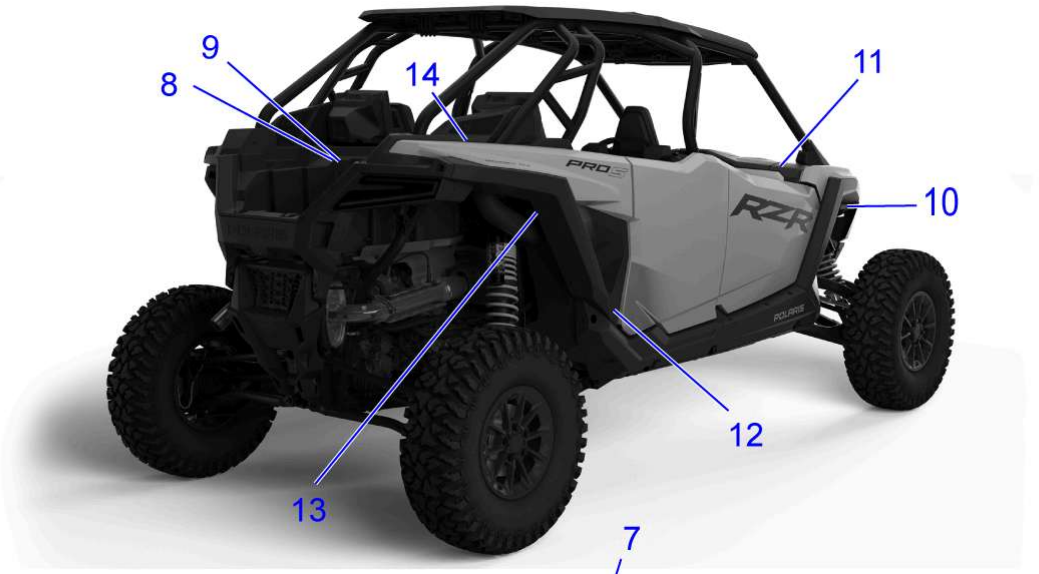


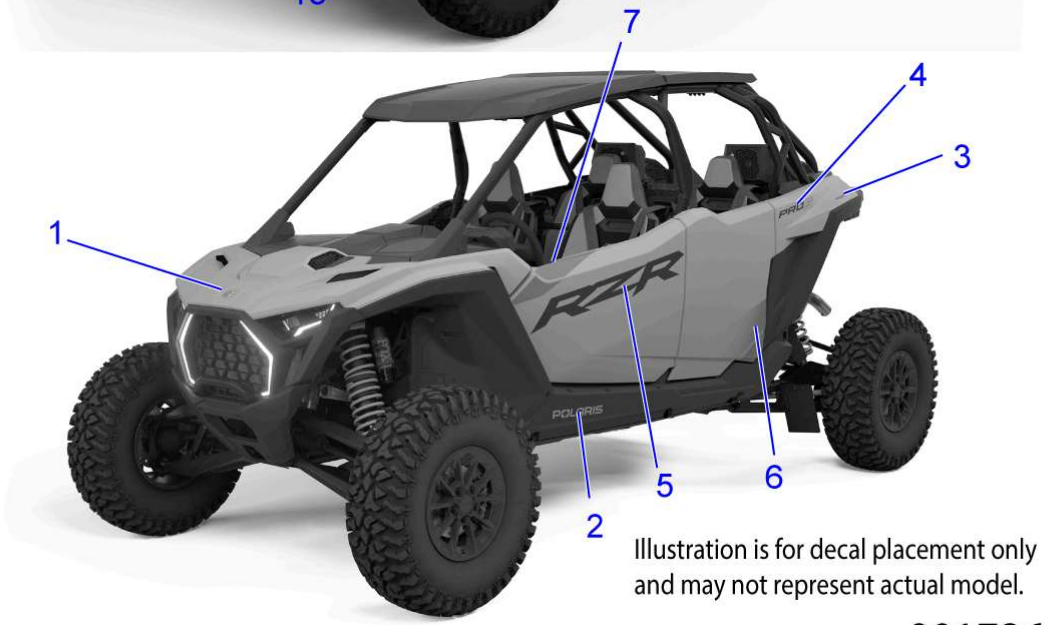


Illustration is for decal placement only and may not represent actual model.

© 2025 Polaris Industries Inc.

901736

| Reference # | Part# | Description | Quantity |
|---|---|---|---|
| 1 | 5270256 | BADGE-POLARIS STAR LG | 1 |
| 2 | 7198599 | DECAL-POLARIS-TITANIUM | 2 |
| 3 | 7203296 | DECAL-RR.FNDR,UPR,DYNAMIX,LH | 1 |
| 3 | 7203297 | DECAL-RR.FNDR,UPR,DYNAMIX,RH | 1 |
| 4 | 7203336 | DECAL-RR.FNDR,PROS,LH | 1 |
| 4 | 7203337 | DECAL-RR.FNDR,PROS,RH | 1 |
| 5 | 7203328 | DECAL-DOOR,UPR,LH | 1 |
| 5 | 7203329 | DECAL-DOOR,UPR,RH | 1 |
| 6 | 7203340 | DECAL-DOOR,UPR,4P,LH | 1 |
| 6 | 7203341 | DECAL-DOOR,UPR,4P,RH | 1 |
| 7 | 7203342 | DECAL-DOOR,MID,RZR,LH | 1 |
| 7 | 7203343 | DECAL-DOOR,MID,RZR,RH | 1 |
| 8 | 7203344 | DECAL-RR.DOOR,LWR,LH | 1 |
| 8 | 7203345 | DECAL-RR.DOOR,LWR,RH | 1 |

| | | | |
|---|---|---|---|
| 9 | 7301009 | DECAL-WARN,DRIVER INFORMATION | 1 |
| 10 | 7300842 | DECAL-WARN,PFC | 1 |
| 11 | 7301374 | DECAL-WARN,TIRE PRESSURE | 1 |
| 12 | 2636503 | ASM-REFLECTOR,AMBER W/VHB TAPE | 2 |
| 13 | 7301010 | DECAL-WARN,PASSENGER INFORMATION | 1 |
| 14 | 7301178 | DECAL-FUEL RECOMMENDATION [BESIDE FUEL CAP] | 1 |

Copyright 1996-2026 Polaris Industries U.S.A All rights reserved.